Axolight

POSES - Axolight Lab

Dry location 24VDC CRI90 Parallel wiring MADE IN ITALY

With Poses, designers can compose endless geometric configurations, diffusing light through intersecting straight lines and junction points.
The system features 359° rotatable linear modules linked to circular satellites with a magnetic cover.
Available in suspension, wall, and ceiling versions, Poses offers versatile lighting solutions for any space.

Body & canopy color

Water blue	Raspberry red	White
Pine green	Earth red	Greige
Blue	Rust brown	Yellow
Anthracite grey	Green	Salmon
Black	Turquoise	Red

Materials: Aluminum

Light Source: LED (led driver not included)

CCT

	2700K	3000K	3500K
SPPOS0108 82,1 cm 32,3″ LED source: 19,4W	1447 lm	1608 lm	1817 lm
SPPOS0114 142,1 cm 55,9″ LED source: 33,5W	2580 lm	3000 lm	3500 lm

Code Construction

SPPOS 01 XX XX XX XX

Color: **BC** White, **GE** Greige, **GI** Yellow, **SA** Salmon, **RS** Red, **RR** Raspberry red, **ER** Earth red, **RU** Rust brown
VE Green, **TU** Turquoise, **WB** Water blue, **PG** Pine green, **BL** Blue, **AN** Anthracite grey, **NE** Black

CCT: **27** 2700K, **30** 3000K, **35** 3500K

Lightbar size: **08** 82,1 cm 32,3″, **14** 142,1 cm 55,9″

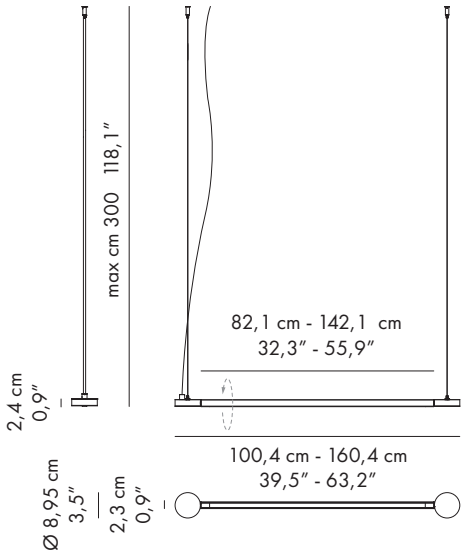

Drivers

LED DRIVER 120-277VAC, 24VDC, Class 2		Suitable for cm	Nr of drivers
CEDLTF00600	Dimmable 0 -10V, IGBT-TRIAC, ELV - Max 25W	82,1 cm 32,3″	1
CEDLTF00611	Dimmable 0 -10V, IGBT-TRIAC, ELV - Max 60W	142,1 cm 55,9″	1

Use only Class 2 led drivers

Canopies	Suitable for
ACCANOPYTO001XX	**CEDLTF00600** (1 pc) **CEDLTF00611** (1 pc)
ACCANOPYRE001XX	**CEDLTF00600** (1 pc) **CEDLTF00611** (1 pc)
ACCANOPYIN001XX	Can not house led driver

See next page for more info about canopies

Nominal flux (lm) of the products are estimated on the LED sources, with tolerances defined by manufacturers.

Accessories

Recessed canopy

ACCANOPYIN001 XX

Color

BC	GE	GI	SA	RS	RR	ER	RU
White	Greige	Yellow	Salmon	Red	Raspberry red	Earth red	Rust brown

VE	TU	WB	PG	BL	AN	NE
Green	Turquoise	Water blue	Pine green	Blue	Anthracite grey	Black

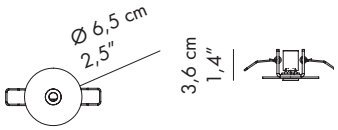

Hole Ø 4,5 cm 1,8" Min. depth. 10 cm 3,9"

Surface canopies

ACCANOPYRE001 XX

Color

BC	GE	GI	SA	RS	RR	ER	RU
White	Greige	Yellow	Salmon	Red	Raspberry red	Earth red	Rust brown

VE	TU	WB	PG	BL	AN	NE
Green	Turquoise	Water blue	Pine green	Blue	Anthracite grey	Black

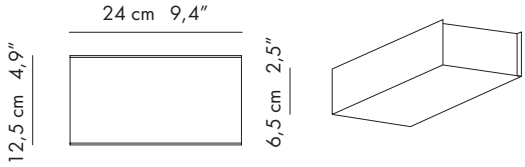

ACCANOPYTO001 XX

Color

BC	GE	GI	SA	RS	RR	ER	RU
White	Greige	Yellow	Salmon	Red	Raspberry red	Earth red	Rust brown
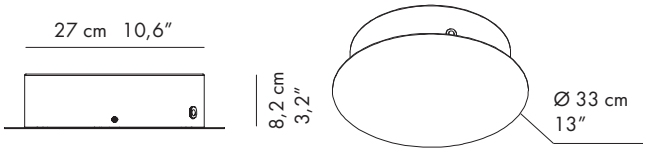
VE	TU	WB	PG	BL	AN	NE
Green	Turquoise	Water blue	Pine green	Blue	Anthracite grey	Black